HB 4257

Presented by

Telecommunications Association of Michigan

July 14, 2009

TELECOMMUNICATIONS
ASSOCIATION OF MICHIGAN

Michigan's Network Builders

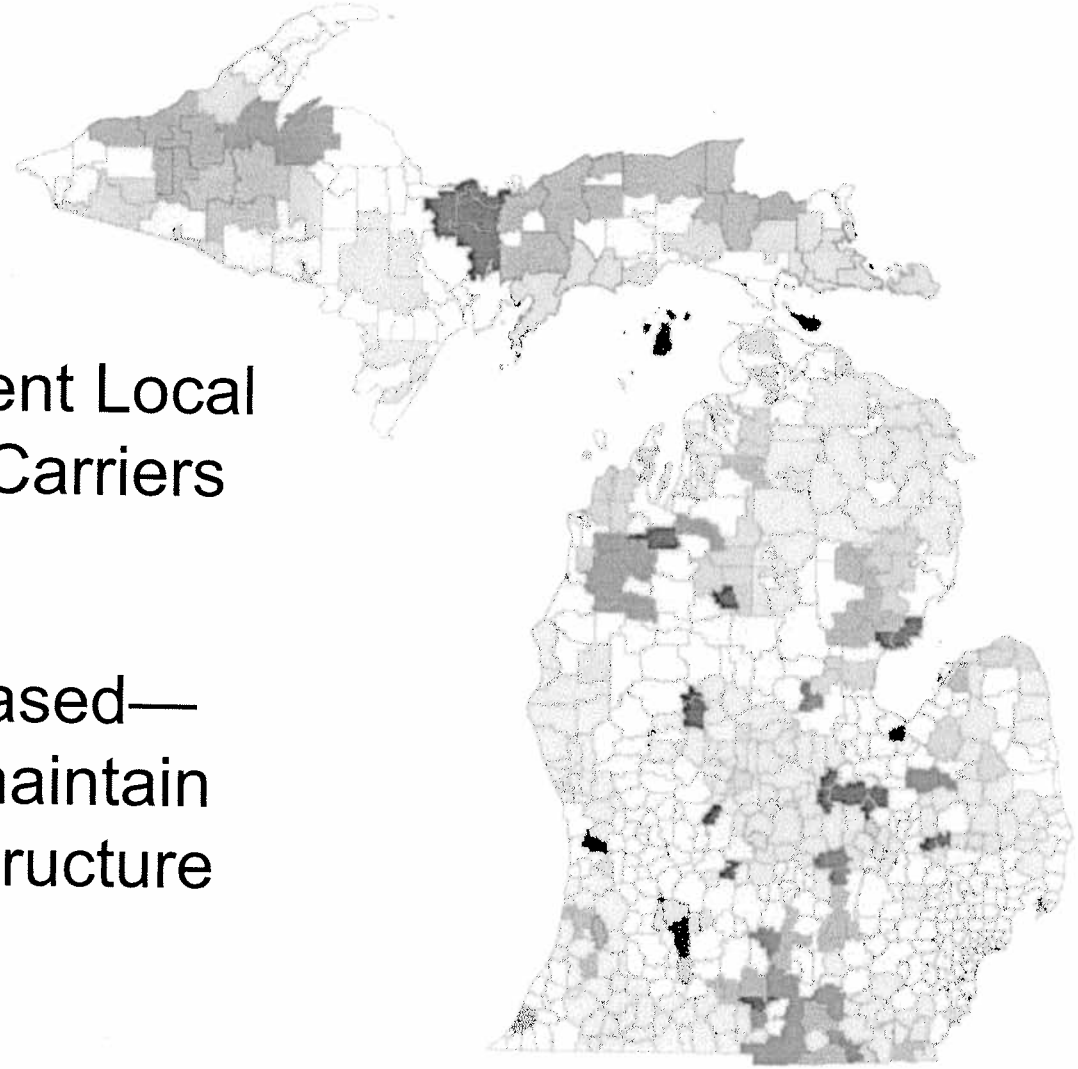

- 36 Incumbent Local Exchange Carriers (ILECs)
- Facilities based—build and maintain local infrastructure

TELECOMMUNICATIONS
ASSOCIATION OF MICHIGAN

A Closer Look

Michigan House District 109

Incumbent Local Exchange Carriers by Service Area

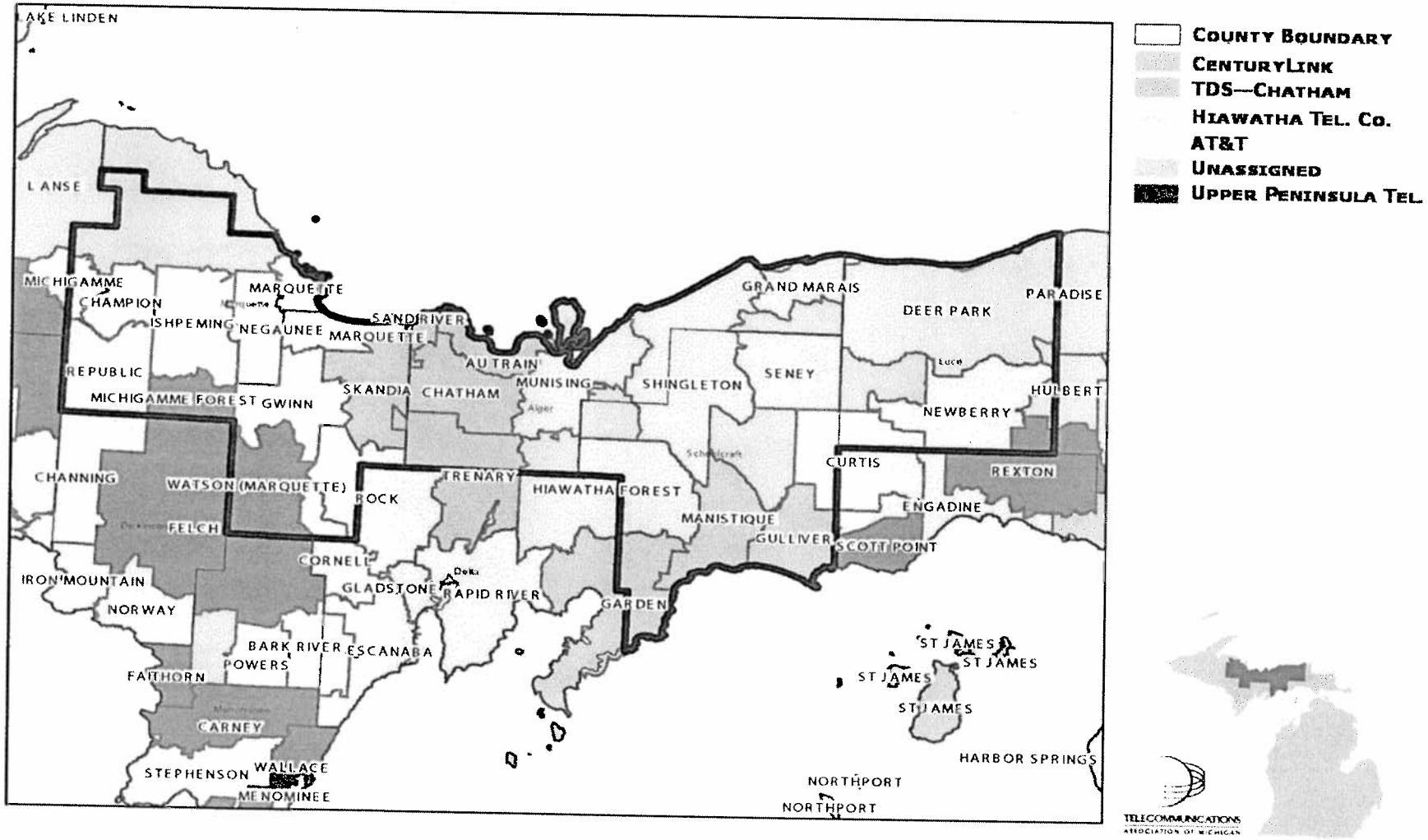

TELECOMMUNICATIONS
ASSOCIATION OF MICHIGAN

Long History of Corporate Citizenship

- Ontonagon County Telephone Company was Michigan's first (1877) and is still in business, providing broadband service to today's customers.
- TAM members have invested more than $11 billion in the state's telecom network infrastructure.
- TAM members employ thousands of Michigan workers and pay hundreds of millions of dollars annually in state and local taxes.

TELECOMMUNICATIONS
ASSOCIATION OF MICHIGAN

Wireless Calls, VoIP Calls, CLEC Calls:

Local Networks Play Critical Role

TELECOMMUNICATIONS
ASSOCIATION OF MICHIGAN

ILEC to ILEC

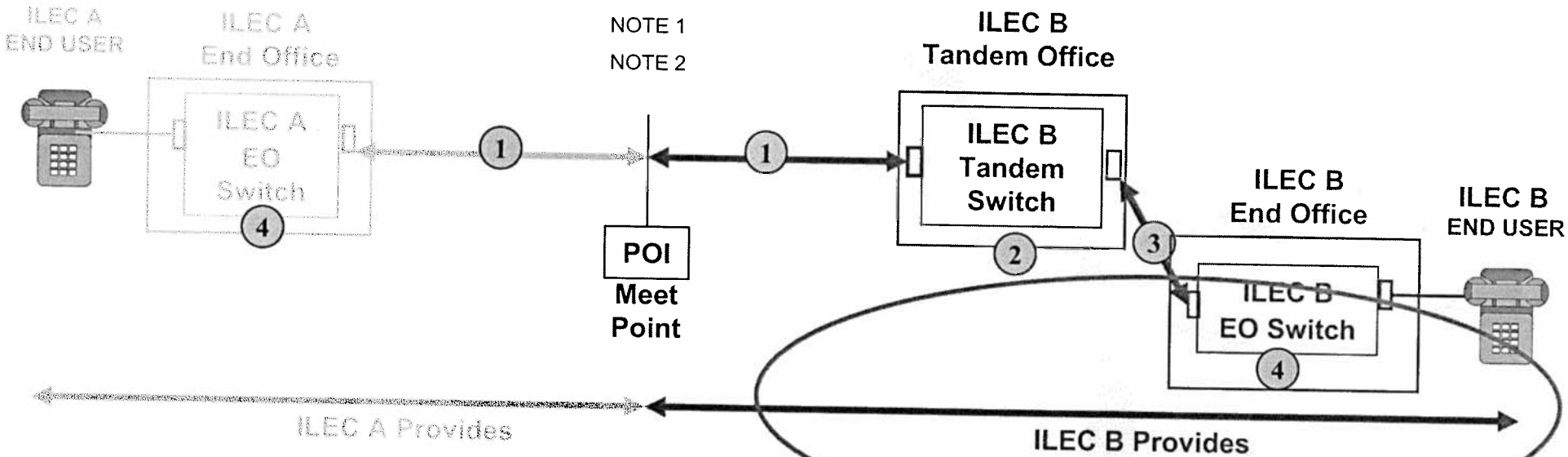

Financial Responsibility: Each company is responsible for facilities on its side of the POI or meet point. Generally, the financial responsibility is Calling Party Network Pays (CPNP). However, varying rate structures lead to asymmetrical charges and transport obligations. Often times the compensation arrangement is bill and keep.

		Originating from ILEC A			Originating from ILEC B	
	NETWORK FUNCTION	**PAID BY**	**PAID TO**		**PAID BY**	**PAID TO**
1	Transport – jointly provisioned	Note 3	Note 3		Note 3	Note 3
2	Tandem Switching	ILEC A	ILEC B		N/A	N/A
3	Common Transport	ILEC A	ILEC B		N/A	N/A
4	End Office Switching	ILEC A	ILEC B		ILEC B	ILEC A

Note 1 – Carries traffic from a variety of carriers.

Note 2 – Separate facilities are established between the ICO and ILEC for carrying EAS type traffic.

Note 3 – Each ILEC provides facilities for both originating and terminating traffic to the POI or meet point.

IXC & ILEC Traffic – End Office Routed

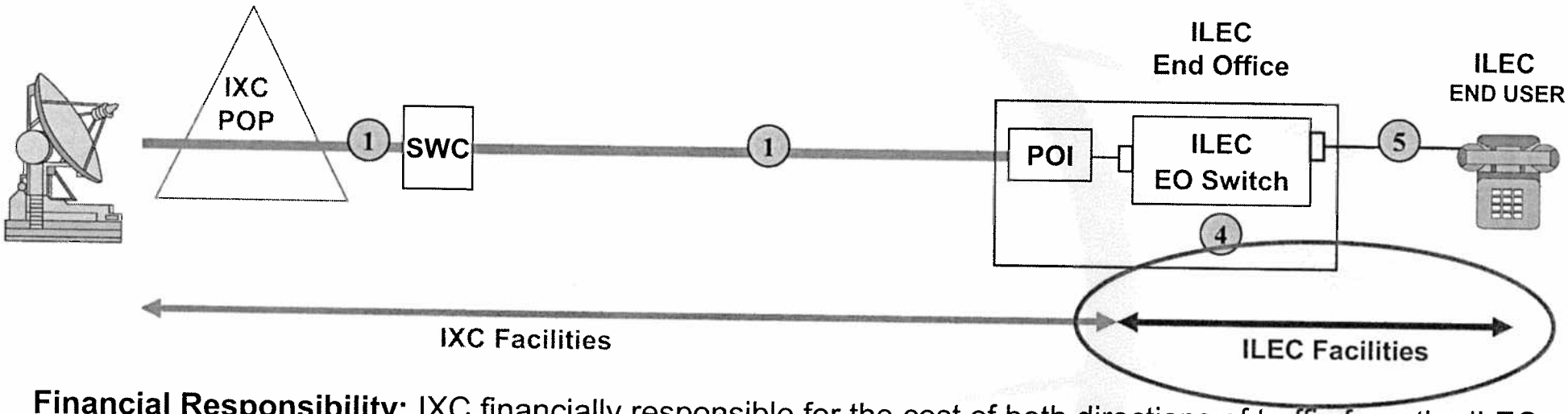

Financial Responsibility: IXC financially responsible for the cost of both directions of traffic from the ILEC end-user to IXC POP. Subject to widely varying rates depending on jurisdiction (interstate/intrastate) and widely varying local/long distance calling scopes.

For Both Directions of Traffic

	NETWORK FUNCTION	PAID BY	PAID TO
1	Dedicated Transport	IXC	Dedicated Transport Provider*
4	End Office Switching	IXC	ILEC
5	Common Line	IXC	ILEC

*IXC may self-provision.

TELECOMMUNICATIONS
ASSOCIATION OF MICHIGAN

CMRS (Wireless) Provider & ILEC

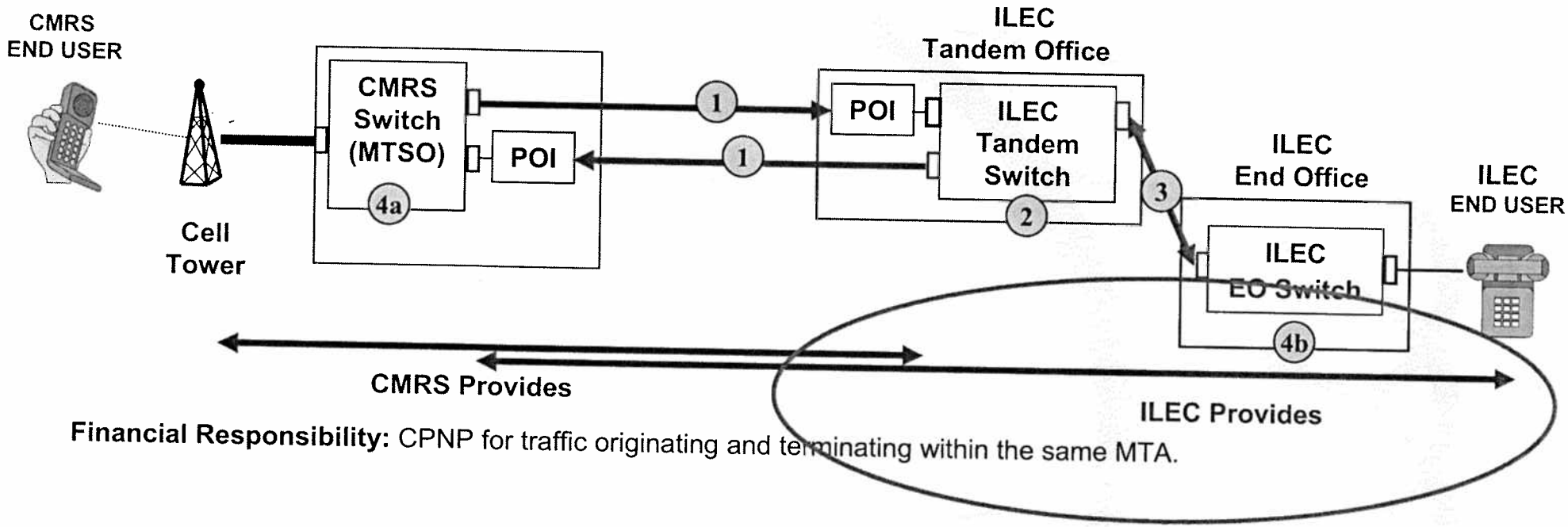

Financial Responsibility: CPNP for traffic originating and terminating within the same MTA.

		Originating from CMRS		Originating from ILEC	
	NETWORK FUNCTION	**PAID BY**	**PAID TO**	**PAID BY**	**PAID TO**
1	Transport	CMRS*	ILEC or CMRS*	ILEC*	CMRS or ILEC*
2	Tandem Switching	CMRS	ILEC	N/A	N/A
3	Common Transport	CMRS	ILEC	N/A	N/A
4	Switching a) MTSO Switching b) End Office	b) CMRS	b) ILEC	a) ILEC	a) CMRS

TELECOMMUNICATIONS
ASSOCIATION OF MICHIGAN

Cost Recovery for ILECs

- **Local Rates paid by customer**
  - Monthly service price
  - Features (Caller ID, Voice Mail, etc.)
- **Intercarrier Compensation paid by providers**
  - Access charges
  - Reciprocal compensation
- **Universal Service funding**
  - Supports cost of providing service in high cost areas
  - Lowers price for:
    - low-income customers (urban and rural)
    - schools and libraries (urban and rural)

Rural Markets are More Expensive to Serve

"The average total plant investment per loop for rural telephone companies is nearly twice that of non-rural companies. Rural Carriers tend to serve areas with proportionately less high-volume users and have operations of substantially smaller scale than non-Rural Carriers. These are just several examples of the significant differences between Rural and non-Rural Carriers."

-Conclusion of the FCC's Federal – State Joint Board on Universal Service's Rural Task Force, White Paper 2

Rural Markets are More Expensive to Serve

Why are costs higher for rural providers?

- Low population densities mean fewer customers per square mile
- Higher percentage of residential customers and lower percentage of multi-line business customers
- Switching equipment costs higher per customer
- When combined with other factors, the national average investment per "loop" (line) is more than $5,000 for rural providers compared to less than $3,000 for non-rural providers.

TELECOMMUNICATIONS
ASSOCIATION OF MICHIGAN

Rural Telco Cost Recovery: Status Quo

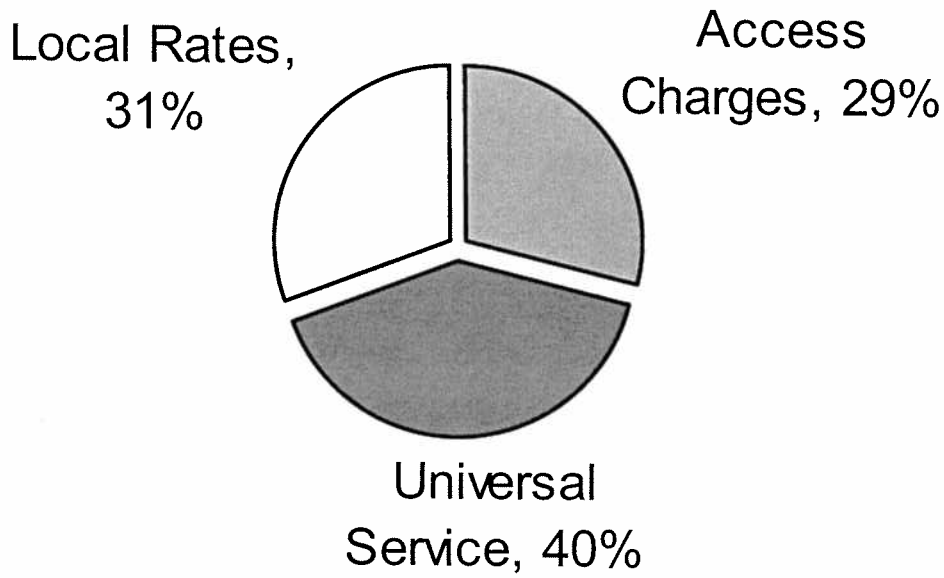

TELECOMMUNICATIONS ASSOCIATION OF MICHIGAN

Source: FCC Docket No. 01-92, NECA Comments, 5/23/05

Rural Telco Cost Recovery:
$20 Local Rate

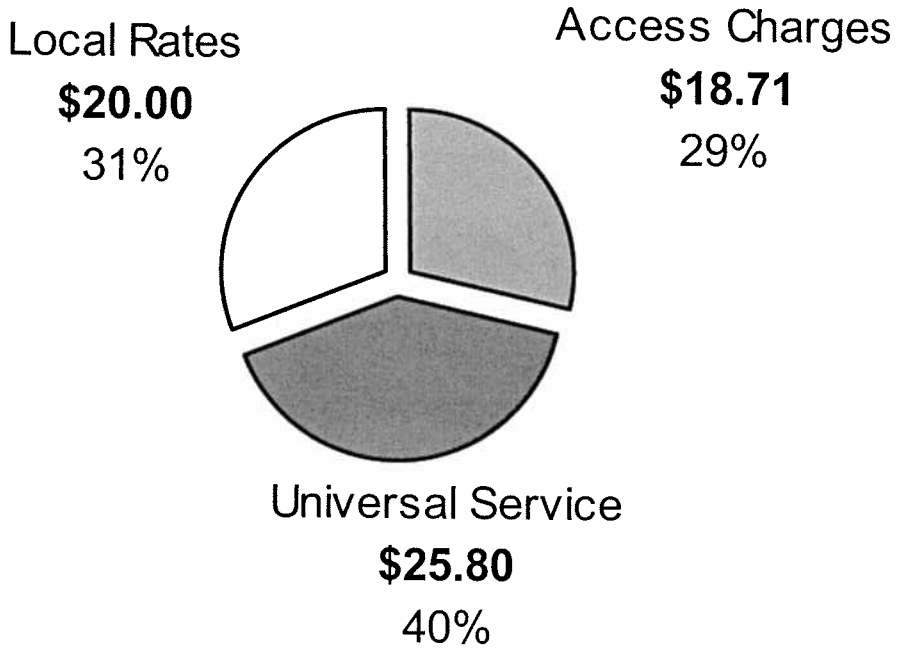

Total Cost of Providing Service = **$64.51** per line

TELECOMMUNICATIONS
ASSOCIATION OF MICHIGAN

Toll Access Charges

- Paid to LECs on a per-minute-of-use basis by providers using LEC networks.
- Created by FCC to let LECs recover cost of transmitting other provider's traffic on the local network.
- *Intra*state access charges created to recover costs within states.
- *Inter*state access charges created to recover costs of state-to-state and international calls.

TELECOMMUNICATIONS
ASSOCIATION OF MICHIGAN

Substitute for HB 4257

- Reduces intrastate access rates without negatively impacting rural customers
- More closely aligns state and federal policies
- Creates certainty and predictability for industry

Substitute for HB 4257

Lowers Intrastate Access Rates to Interstate Level

- Companies "mirror" their interstate rates by reducing intrastate rates, resulting in lost revenues
  - For ILECs, occurs when RM is operational
  - For CLECs, rates phased down over approx. 3 years
  - No change for AT&T and Verizon* (already mirror rates)

**Note: Verizon will no longer be a LEC in Michigan after the sale of its Michigan landlines to Frontier Communications is completed.*

Rural Telco Cost Recovery:
Impact of Cutting Intrastate Access Rates

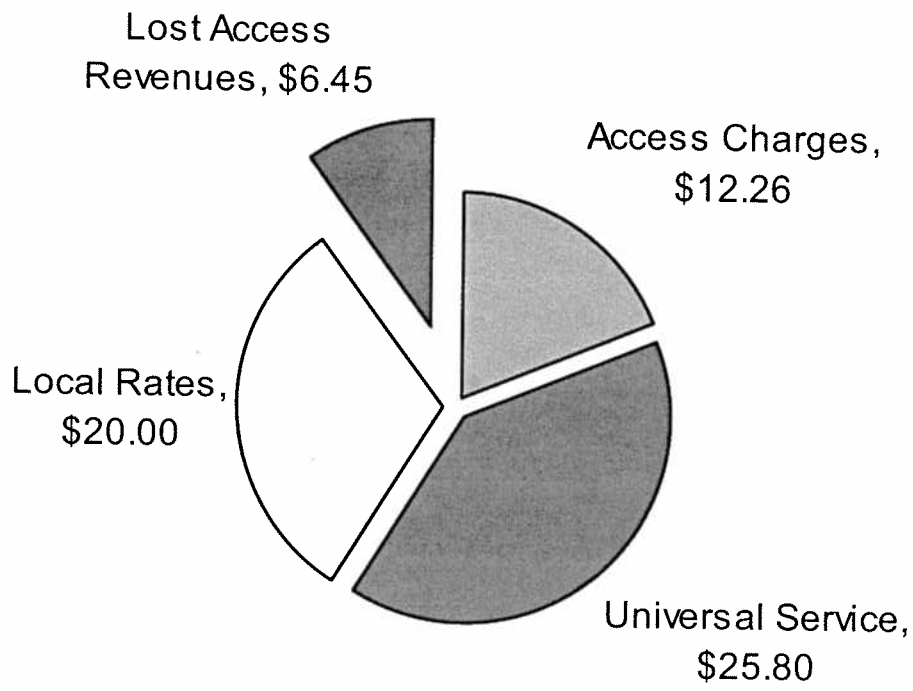

- Providers using rural networks save money by paying less for that use.
- Rural providers lose money that kept local rates affordable for customers.
- TAM estimates show access revenue losses as high as $13 per customer per month if companies required to "mirror" federal rates.

TELECOMMUNICATIONS
ASSOCIATION OF MICHIGAN

Substitute for HB 4257

Restructuring Mechanism Created to Reimburse ILECs

- Companies eligible to recover their lost access revenues subject to benchmark imputation

- Reimbursements limited to ILECs who own networks serving high cost areas

TELECOMMUNICATIONS
ASSOCIATION OF MICHIGAN

Replacing Lost Access Revenues

With Restructuring Mechanism

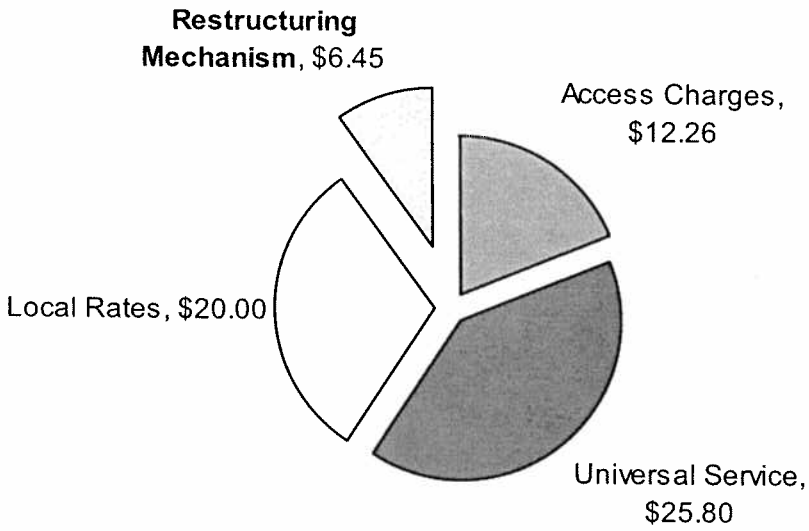

Without Restructuring Mechanism

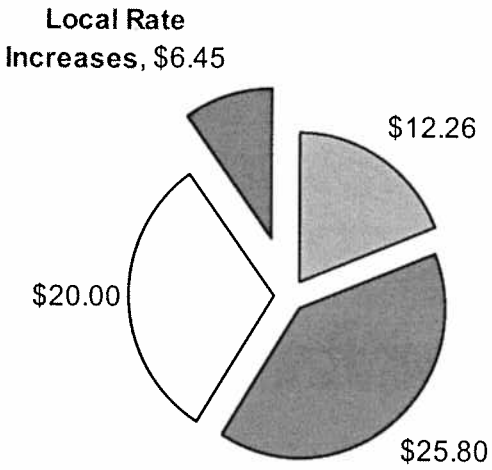

Rural providers could also consider **cutting network investments** in their communities and/or **laying off employees** to avoid price increases.

TELECOMMUNICATIONS
ASSOCIATION OF MICHIGAN

Substitute for HB 4257

All Providers Contribute to RM

- ILECs, CLECs, CMRS, Interconnected VoIP
- Contributors benefit from:
  - paying lower access rates to rural providers
  - Continued use of networks maintained and upgraded via rural provider investments
- Contributions based on percentage of retail intrastate telephone revenues (not on cable TV revenues, equipment sales, etc.)

Substitute for HB 4257

RM Resized Every 3 Years

- Adjustments made to take changing industry dynamics into account
- Reimbursements reduced if lines decline

TELECOMMUNICATIONS
ASSOCIATION OF MICHIGAN

Substitute for HB 4257

FCC Reform Triggers Review

- If FCC acts on major intercarrier compensation reforms, state mirroring requirement can be temporarily suspended while MPSC considers changes to RM

- Intrastate rates <u>cannot be raised</u> during this time

TELECOMMUNICATIONS
ASSOCIATION OF MICHIGAN

Substitute for HB 4257

Administrative Structure

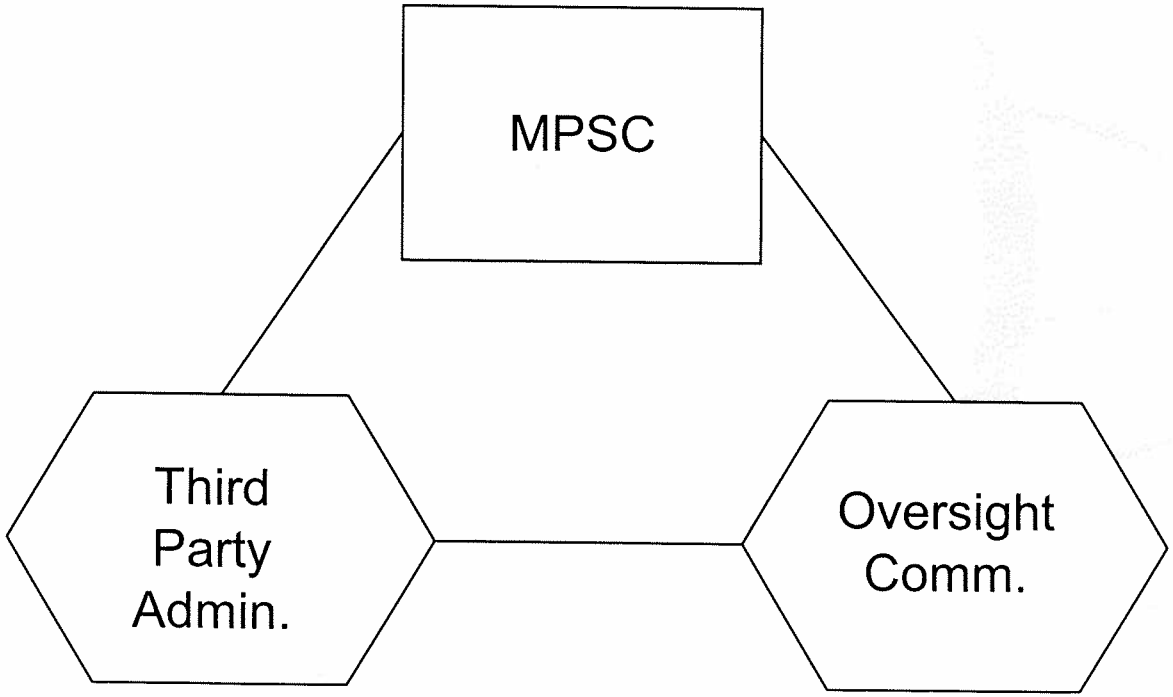

TELECOMMUNICATIONS ASSOCIATION OF MICHIGAN

Substitute for HB 4257

MPSC's Role

- Selects Oversight Committee and Third Party Admin.
- Approves RM size and contribution percentage
- Audits RM
- Considers impact of future FCC reforms on RM
- Considers complaints and enforces requirements

Substitute for HB 4257

Oversight Committee's Role

- 5 members appointed by MPSC
- Issues RFP for Third Party Admin.
- Monitors and reviews operations
- Considers issues and makes recommendations to MPSC

Substitute for HB 4257

Third Party Administrator's Role

- Finalized RM size, contribution percentage and reimbursement amounts
- Collects contributions and disburses reimbursements
- Establishes operating procedures
- Issues reports to Oversight Committee and MPSC

Substitute for HB 4257

TAM Members Support It

- Carefully crafted to avoid:
  - price increases on customers
  - deteriorating networks
  - employee layoffs
- Ensures that all providers pay for using local networks
- Creates certainty and predictability for providers

TELECOMMUNICATIONS
ASSOCIATION OF MICHIGAN